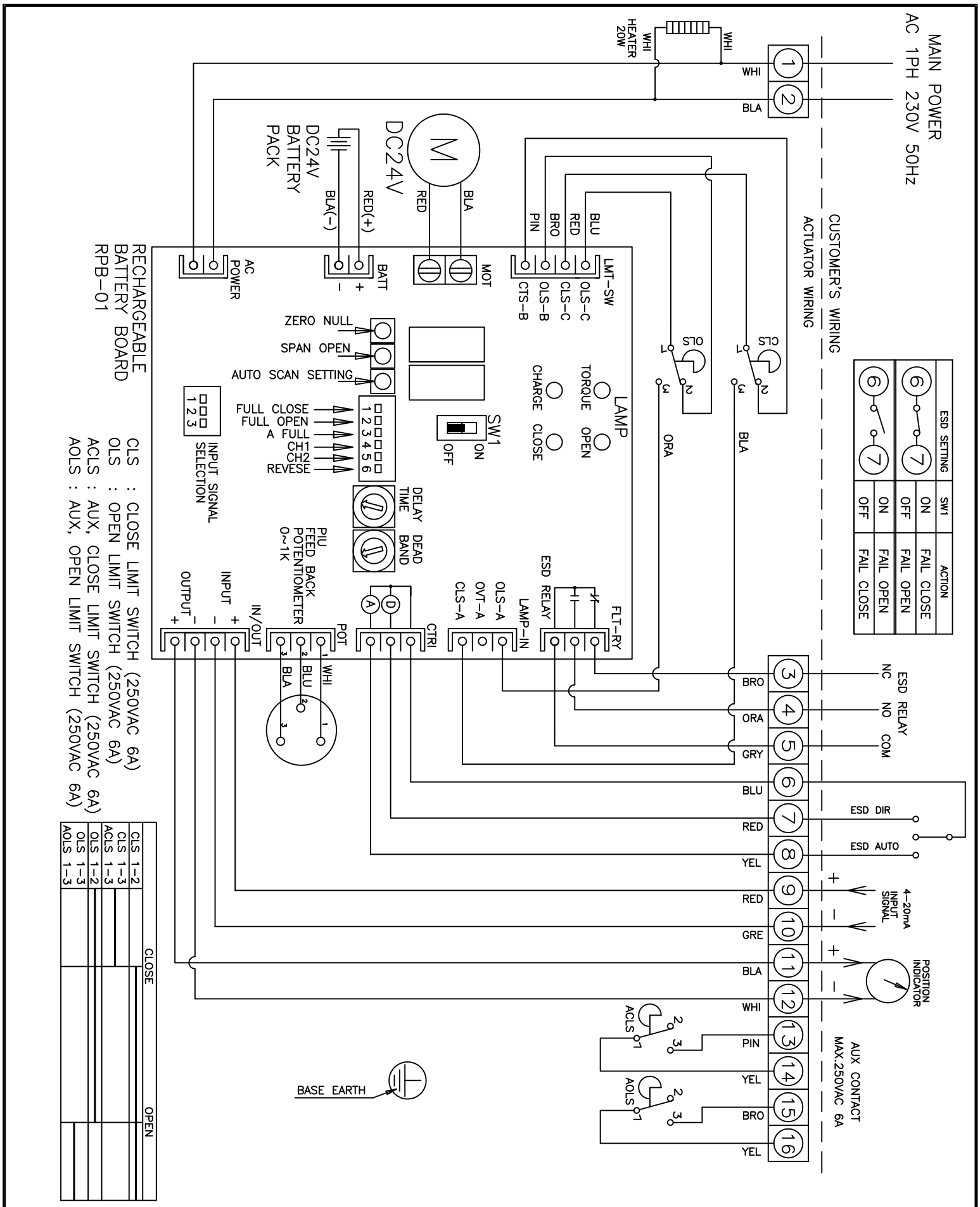

		△					
		SYM	E C N NO	CHANGES	DATE	SIGN	APPD
		DRAW	H,J KWON	PART NAME	1PH WIRING DIAGRAM ALS,PCU,RPB		
A009	1	CHECK					
A006	1	APPD		DWG NO.	NU-12560-C		
APPLICATION		DATE	'09.12.21				