CLS : CLOSE LIMIT SWITCH (250VAC 6A)
OLS : OPEN LIMIT SWITCH (250VAC 6A)
CTS : CLOSE TORQUE SWITCH (250VAC 6A)
OTS : OPEN TORQUE SWITCH (250VAC 6A)
ACLS : AUX, CLOSE LIMIT SWITCH (250VAC 6A)
AOLS : AUX, OPEN LIMIT SWITCH (250VAC 6A)

	CLOSE	OPEN
CLS 1–2		
CLS 1–3		
OLS 1–2		
OLS 1–3		
CTS 1–3	* CLOSING TORQUE SWITCH INTERRUPTS CONTROL IF MECHANICAL OVERLOAD OCCURS DURING CLOSING CYCLE	
OTS 1–3	* OPENING TORQUE SWITCH INTERRUPTS CONTROL IF MACHANICAL OVERLOAD OCCURS DURING OPENING CYCLE	

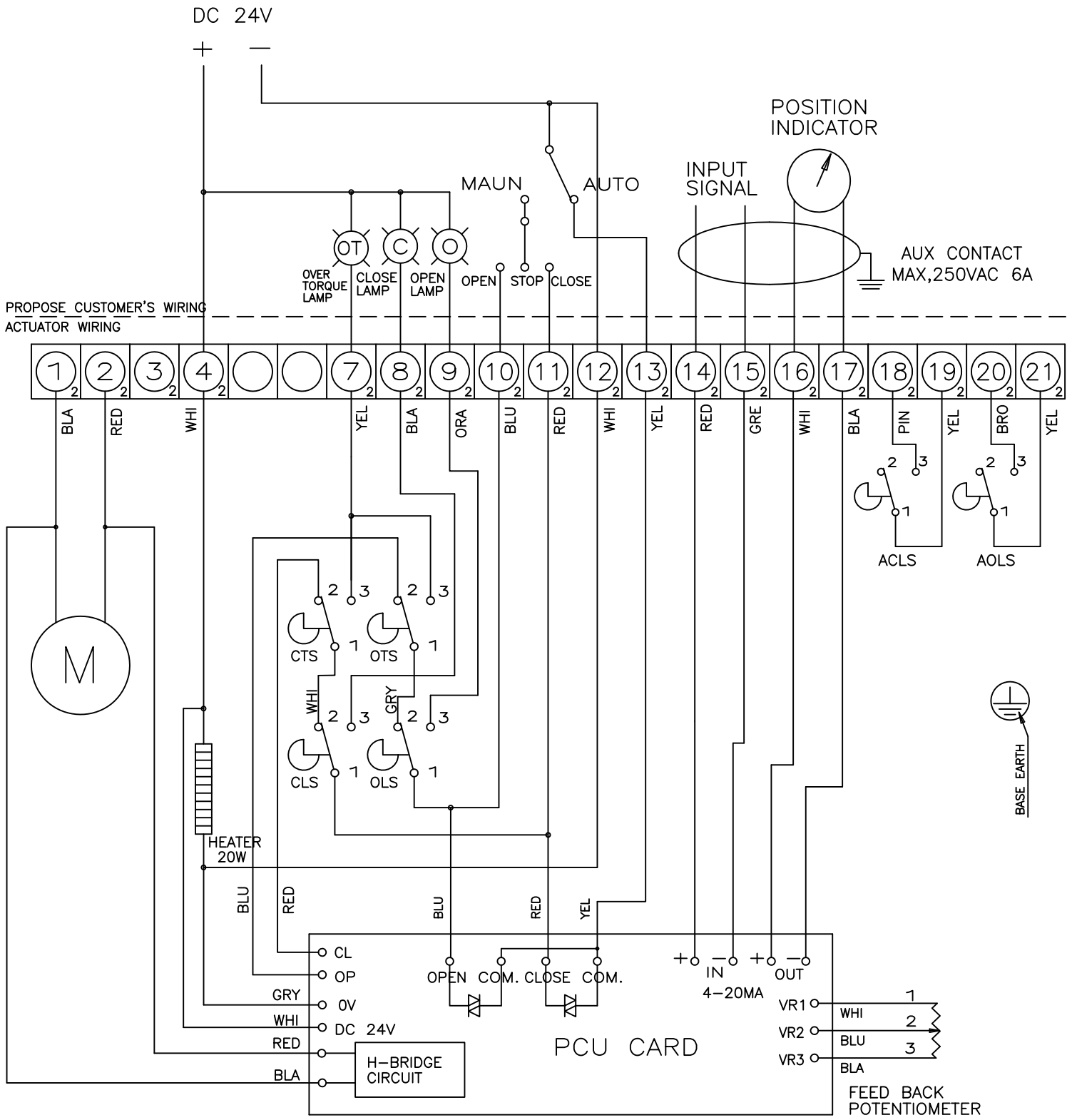

			△					
			SYM	E C N NO	CHANGES	DATE	SIGN	APPD
A028	1		DRAW	H,J KWON	PART NAME DC WIRING DIAGRAM PCU,ALS			
A019	1		CHECK					
A015	1		APPD					
APPLICATION			DATE	'15,01,29	DWG NO. NS–82500–F			